THIS DRAWING IS PROPRIETARY AND CONFIDENTIAL PROPERTY OF TROMBETTA AND IS LOANED IN CONFIDENCE WITH THE UNDERSTANDING THAT IT WILL BE KEPT CONFIDENTIAL AND USED ONLY FOR THE PURPOSE FOR WHICH IT IS LOANED.

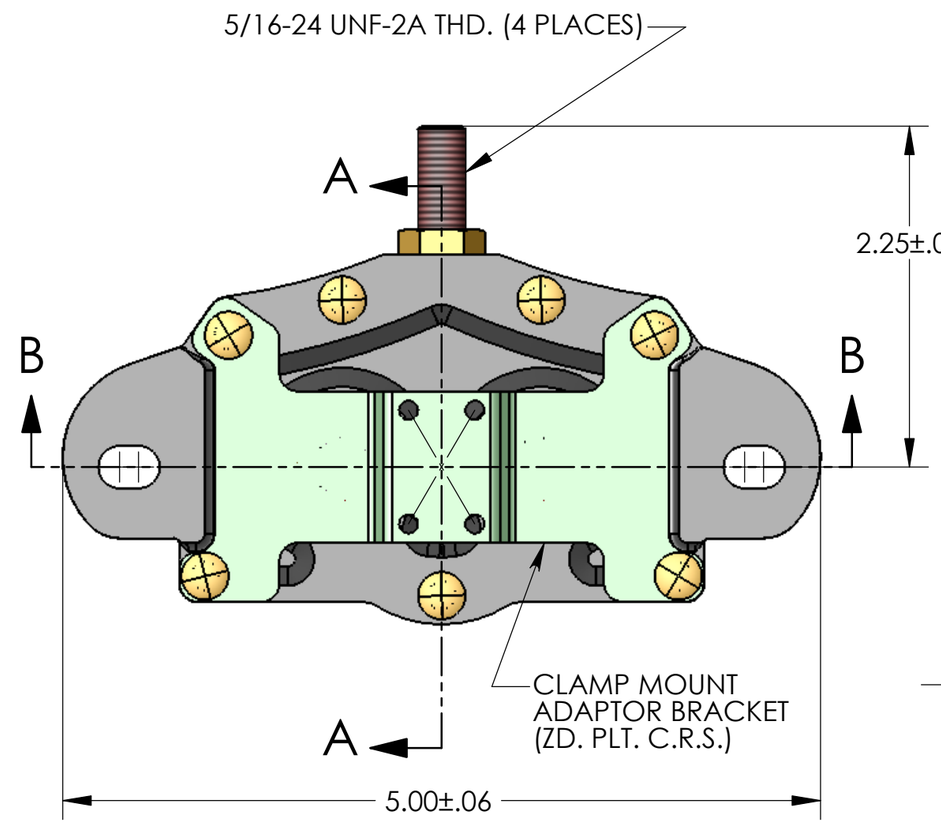

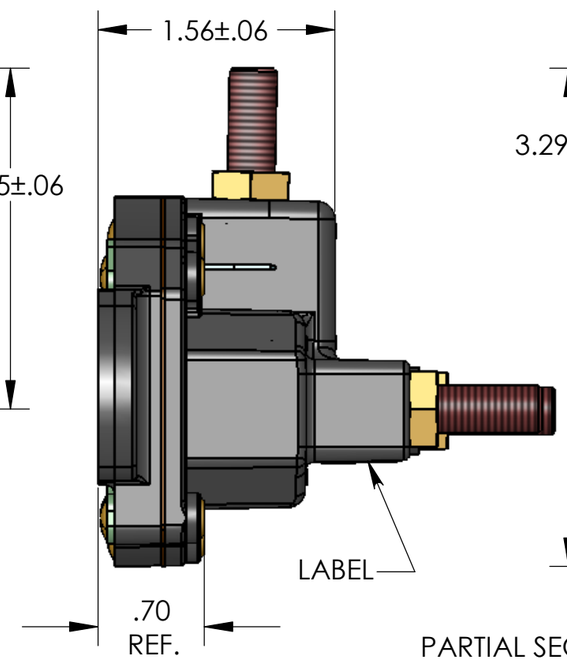

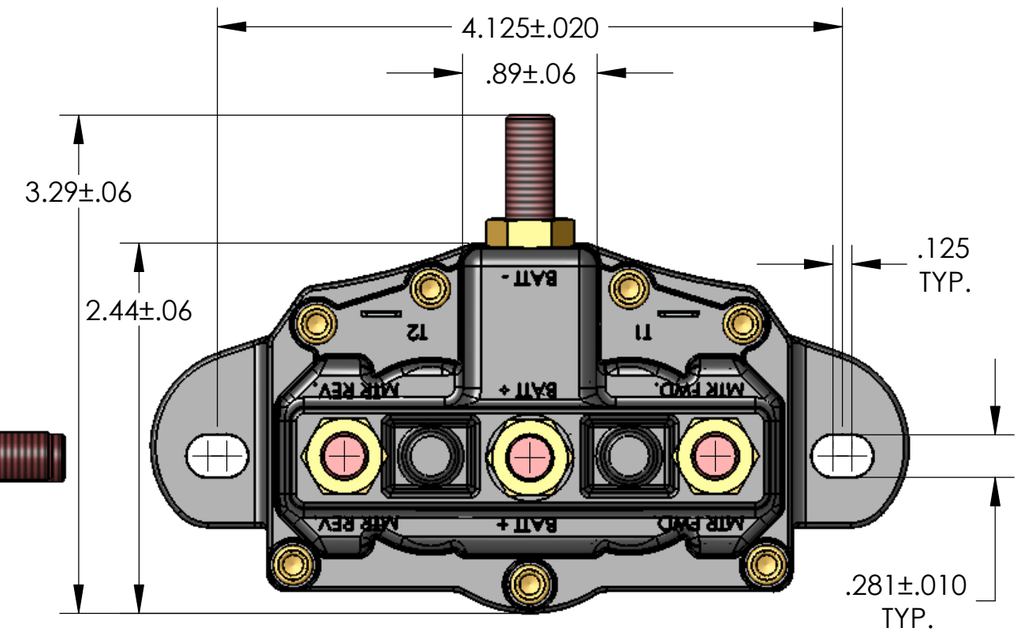

PARTIAL SECTION A-A
SCALE 2:1

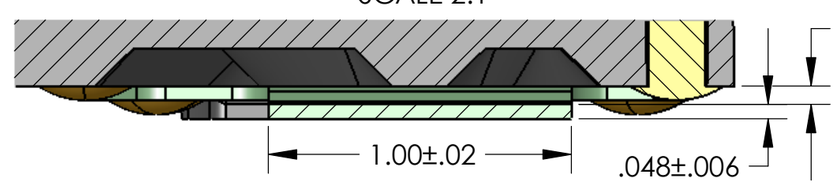

ISOMETRIC VIEW
SCALE 1:2

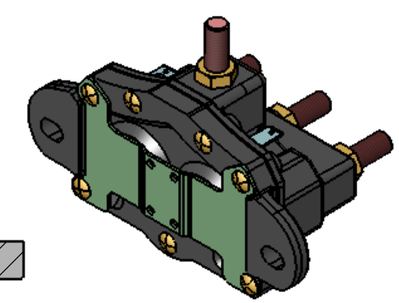

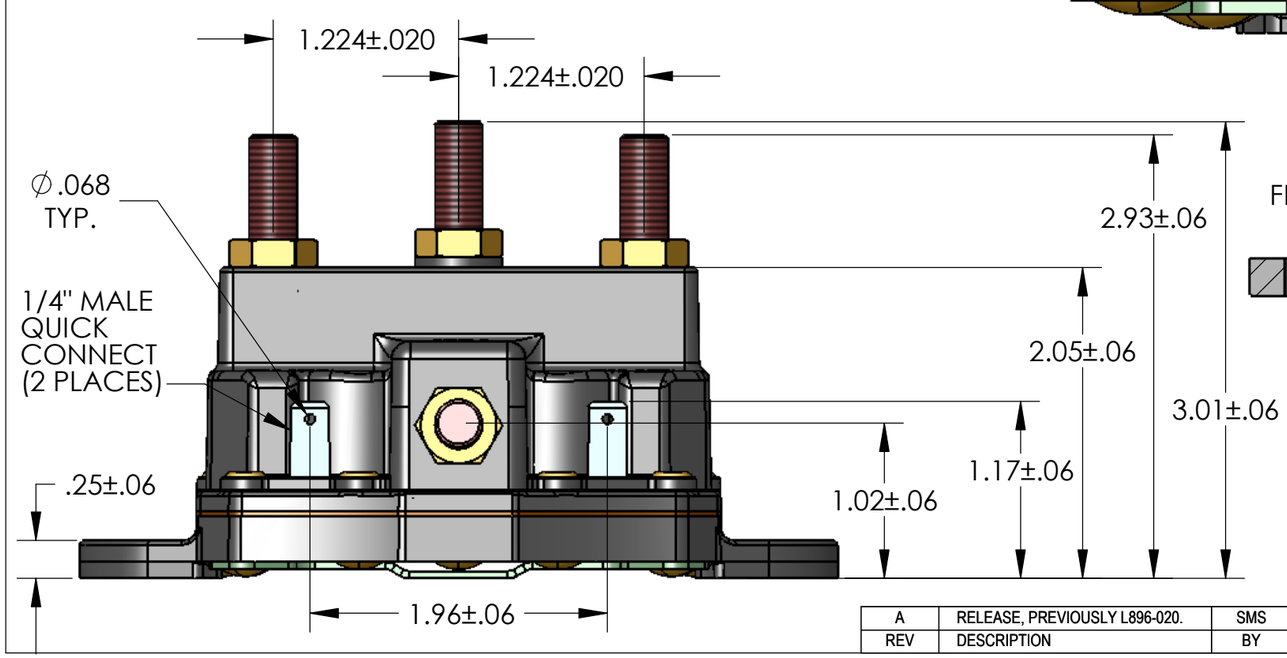

PARTIAL SECTION B-B
SCALE 1:1

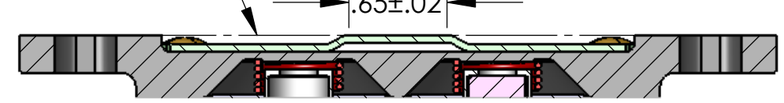

REV	DESCRIPTION	BY	ECN	DATE	APP
A	RELEASE, PREVIOUSLY L896-020.	SMS	4500	11/16/04	TM

MATERIAL

FINISH

UNLESS OTHERWISE SPECIFIED
.XXX +/-.005 .XX +/- .01 ANG. +/- 1°
BREAK ALL EDGES .005-.015 125 FINISH
FILLETS .010-.020 RAD.
k CONTROL PLAN REQUIRED

Trombetta MOTION TECHNOLOGIES

214 SERIES RP CONTACTOR WITH HOSE CLAMP MOUNT BRACKET DIMENSIONAL ASSEMBLY

DRAWN SMS | SCALE 1:1 | DWG. NO. D03924
APPR. TM | DATE 11/01/04