Trombetta+−
MOTION TECHNOLOGIES
Strokes of Genius.

Instruction Sheet for S500-A50

Trombetta's electronic controls are special modules designed to enhance solenoid performance by increasing force capability and reducing operating temperature. Trombetta's electronic controls for solenoids regulate the magnitude of electrical drive applied to the coil during the pull in and / or hold operation of the solenoid to optimize the performance of the solenoid.

Product Specifications:

Voltage Nominal	12 Volts	24 Volts
Voltage Input Min. Max. Range:	8.5-32 (See Note 1)	8.5-32 (See Note 1)
Max Load Current:	80	40
Max Power Load	1000 Watts	1000 Watts
Recycle Time:	.25 Sec. (See Note 3)	.25 Sec. (See Note 3)
Auxiliary input current requirement (when not jumped):	Less than 50 milliamp	Less than 50 milliamp
Operating Ambient Temp:	-30 °C + 80 °C	-30 °C + 80 °C
Actuation Time:	.5 Sec.	.5 Sec.
Transient Voltage Protection:	Integral 5000 Watt Peak Pulse Power TVS	
Insertion Loss	1.0 Volt w/75 Amp Load	0.69 Volt w/50 Amp load
Maximum Cycle Rate:	6 Cycles/Minute for 1 minute maximum duration (See Note 2)	
Reverse Polarity Protection:	Withstands brief reverse polarity of battery inputs if properly fused	

Notes:

1. Minimum voltage required to assure full pull-in time is achieved
2. Maximum cycle rate specification is provided as a figure of merit only. It is intended to provide some idea of what the module can withstand in a burst of rapid cycling. Excessive rapid cycling with short time intervals will result in damage to the solenoid or module. For specific guidance in applications requiring either frequent cycling on an ongoing basis or rapid cycling over short periods of time consult the factory for assistance. Information as to the solenoid to be used, supply voltage, wiring harness information etc. Is required for assistance to be given.
3. Minimum time voltage must be removed in order for the pull in timer to reset for full 0.5 second pull in.

****** Consult Trombetta if high vibration is anticipated. ******

Application Information:

Some applications require a high force capacity in a relatively small package. In order to achieve this solenoids typically have been designed with a (2) section coil, "high current pull-in coil" and a "low current, continuous duty hold-in coil." This solution required that the "high current pull-in coil" be electrically disconnected once the solenoid had pulled in and only the "low current hold-in coil" be left energized. With the S500-A50 module it is not necessary to disconnect the "high current pull-in coil" after the solenoid has pulled in. The module has been designed to work properly with either a (2) section coil or a (1) section coil. The module operates in the following manner. When power is applied to the module it applies full voltage to the solenoid coil or coils. After the actuation time (approximately .5 sec) the module reduces the output voltage to the solenoid to 13% to 16% of the input voltage for continuous duty. This reduced voltage level is applied to the coil or coils until the power is removed. The flexibility to operate with either (2) section or (1) section coils allows the module to be used as a replacement for older relay style modules. Note the wiring connections may not be the same as older relay style modules.

This Trombetta module allows you to incorporate (2) coil section solenoids or (1) coil section solenoids into your applications. These modules accept your 2 wire switched input, (12V or 24V) and applies this input to the solenoid. The S500-A50 module is a cost effective unit that does not require an additional contactor for 24V applications. This module is provided with stainless steel terminal screws standard and tin plated brass terminals maintaining contact integrity in harsh environments.

Figure 1 shows a typical wiring diagram when used with a (2) section coil solenoid, 12V or 24V. Figure 2 shows a typical wiring diagram when used with a (1) section coil solenoid, 12V or 24V. Trombetta recommends that a properly sized fuse is used, the size of this fuse is dependent on the solenoid model used. Please call or email Trombetta for assistance in selection of the proper size fuse.

****** Note when using a S500-A50 module all of the solenoid connections must connect to the module as shown. Do not connect any of the solenoid leads to another ground point in the system.******

Trombetta MOTION TECHNOLOGIES
Strokes of Genius.

Instruction Sheet for S500-A50

Dimensions:
(Inches)

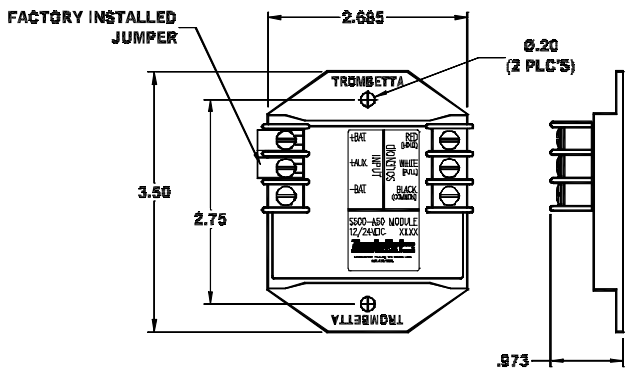

***** Note when using a S500-A50 module all of the solenoid connections must connect to the module as shown. Do not connect any of the solenoid leads to another ground point in the system. *****

Wiring Diagrams:

Figure 1

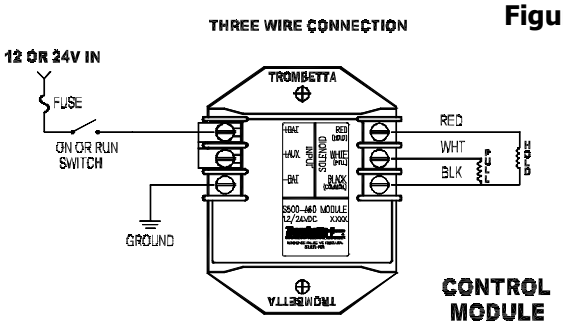

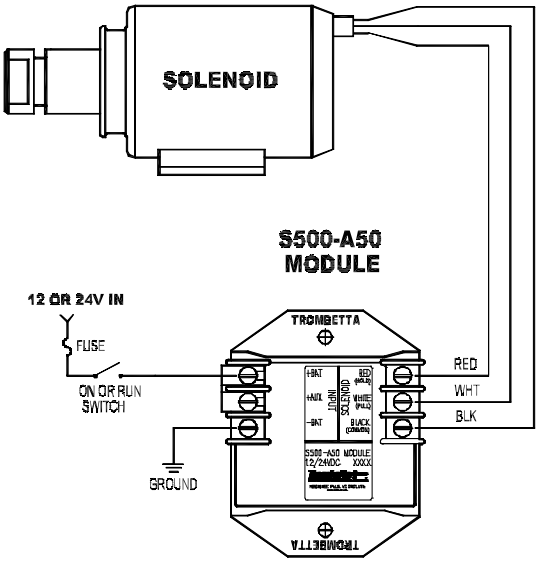

Figure 2

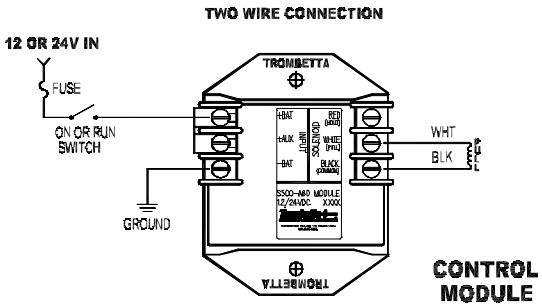

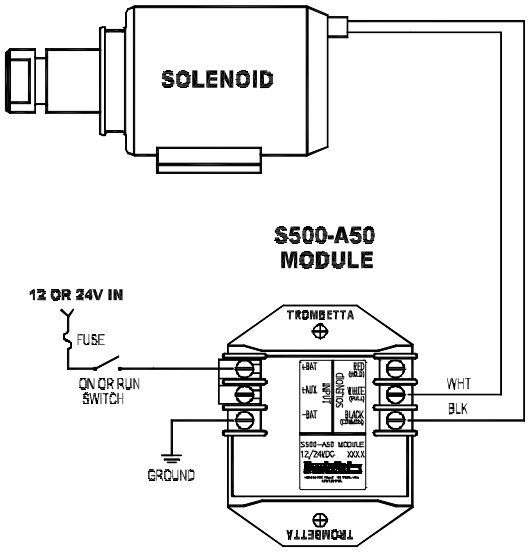

13901 Main St. Menomonee Falls, WI 53051 Phone: 262.251.5454 Fax: 262.251.5757 Email: sales@trombetta.com www.Trombetta.com