Trombetta
MOTION TECHNOLOGIES
Strokes of Genius.

Instruction Sheet for S500-A6

Trombetta's electronic controls are special modules designed to enhance solenoid performance by increasing force capability and reducing operating temperature. Trombetta's electronic controls for solenoids regulate the magnitude of electrical drive applied to the coil during the pull in and / or hold operation of the solenoid to optimize the performance of the solenoid.

Product Specifications:

Voltage Nominal	**12 Volts**	**24 Volts**
Voltage Input Min. Max. Range:	10-32	10-32
Max Load Current:	80	See Note 1
Max Power Load	1000 Watts	See Note 1
Operating Ambient Temp:	-20 °C – 85 °C	20 °C – 85 °C
	68 °F – 185 °F	68 °F – 185 °F
Actuation Time:	.4 - .6 Sec.	.4 - .6 Sec.
Transient Voltage Protection:	200 Volts x 1msec.	200 Volts x 1msec.
Auxiliary Input Voltage Requirement:	8.2 Volt Min.	8.2 Volt Min.
Insertion Loss	0.25 V / See Note 3	0.25 V / See Note 3
Maximum Cycle Rate:	No faster than 1 cycle per second module only, see note 2	
Reverse Polarity Protection:	Yes	Yes

Notes:

1. An external contactor must be used for control of 24 V pull in coils.
2. Operating a solenoid pull in coil at this cycle rate may cause overheating. Consult Trombetta for high cycle rate applications.
3. Insertion loss is the voltage reduction that occurs due to the module.

****** Consult Trombetta if high vibration is anticipated. ******

Application Information:

Some applications require a high force capacity in a relatively small package. In order to achieve this solution, these solenoids contain a "high" current pull-in coil and a "low" current, continuous duty hold-in coil. Once the solenoid has pulled-in it is necessary to disconnect the high current pull-in, winding from the system and leave only the low current hold coil energized to prevent coil burnouts.

Trombetta's modules allow you to incorporate these dual winding solenoids into applications where they couldn't be used previously. These modules accept your 2-wire input plus auxiliary control wire, (12V or 24V) and applies this input simultaneously to both the solenoid pull-in and hold windings. After a short period of time (.4 -.6 sec.), the module timer/relay removes the power from the pull-in coil and leaves only the hold-in coil energized. Figure 1 is a typical wiring diagram for a module. S500-A6 modules are built with an "auxiliary" termination point to allow for the wiring of a remote control to the control module. Your input control is applied to the AUX terminal which in turn controls the module which operates as if it were wired directly. Figure 2 is a typical wiring diagram of the module wired for remote control through the AUX input for a 12 volt application. Figure 3 is a typical 24 volt application with a customer supplied external contactor. It is recommended that a properly sized fuse be used in the circuit. The size of the fuse is dependent on the solenoid model used. Please call or email Trombetta for fuse size assistance.

Trombetta
MOTION TECHNOLOGIES
Strokes of Genius.

Instruction Sheet for S500-A6

Dimensions:
(Inches)

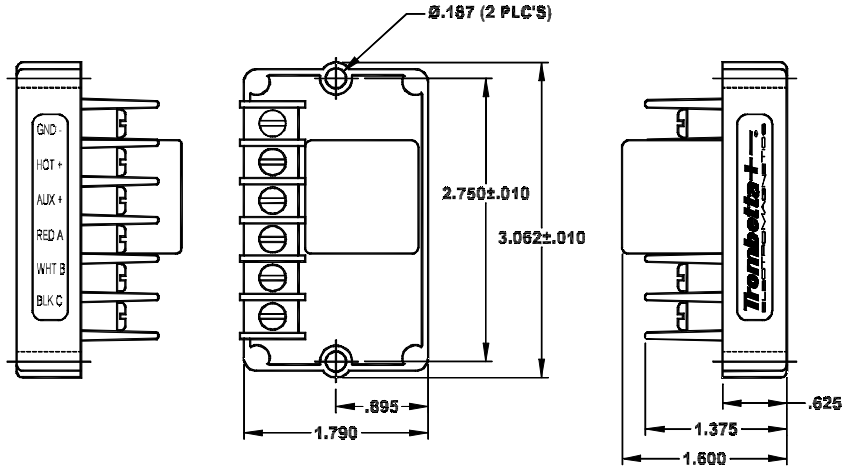

Wiring Diagrams:

Figure 1

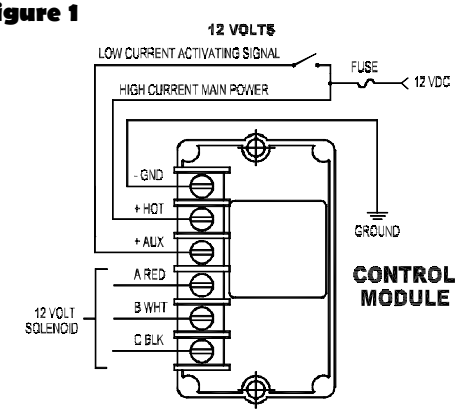

Figure 2

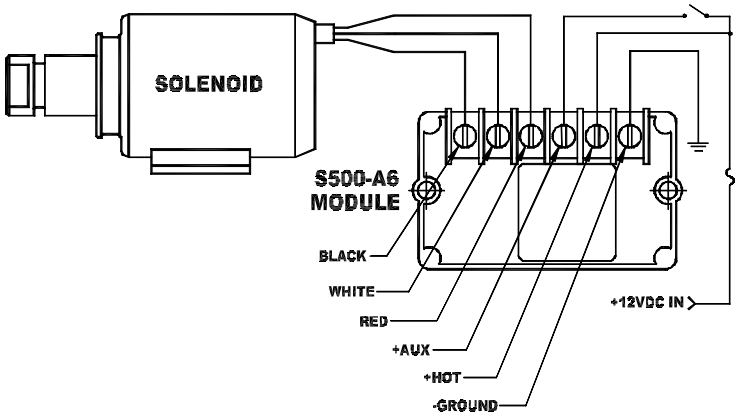
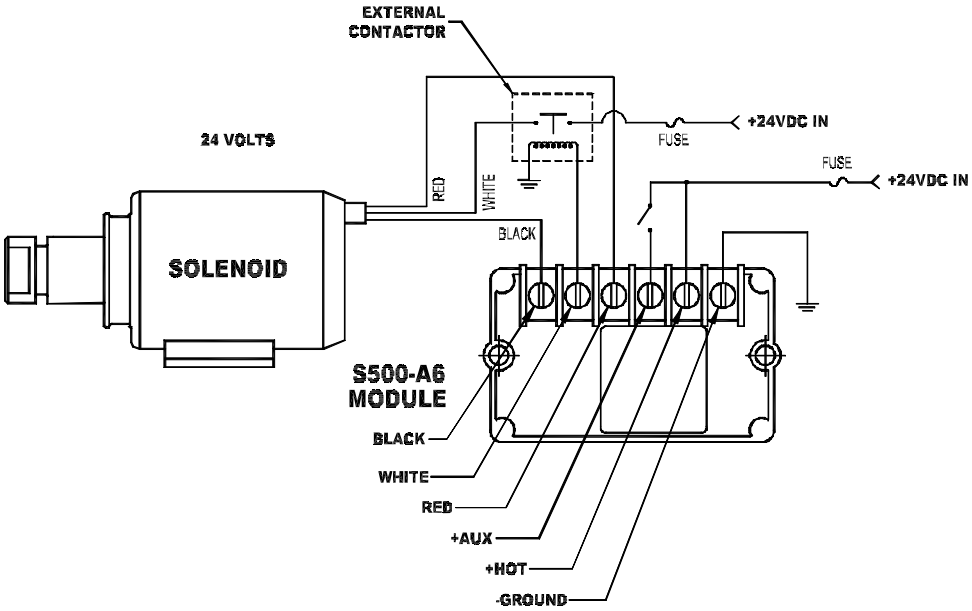
Figure 3